B3 tooth / block

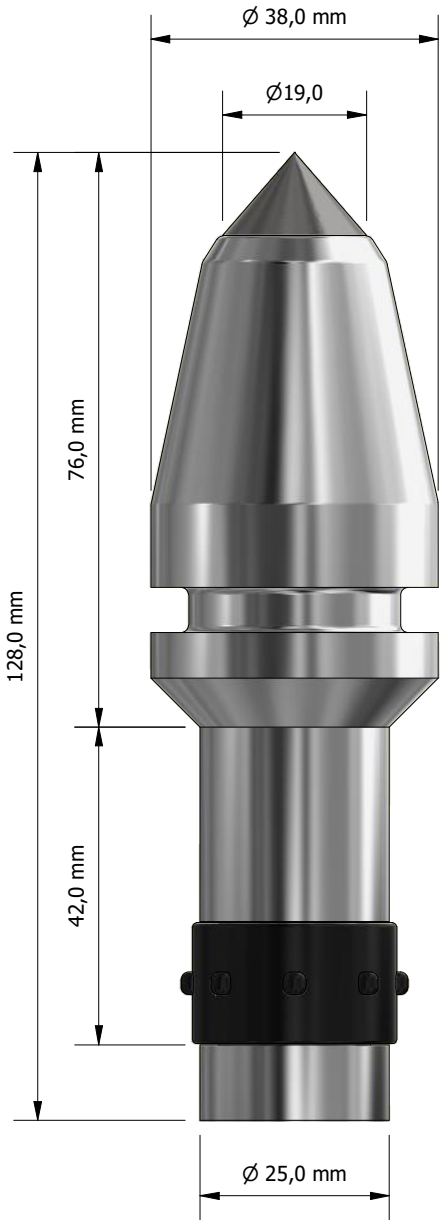

A-A